PICOTE
LIFE FOR PIPES

DRAIN CLEANING QUICK GUIDE

MICRO & MINI MILLER

Clay Pipes

DESCALING

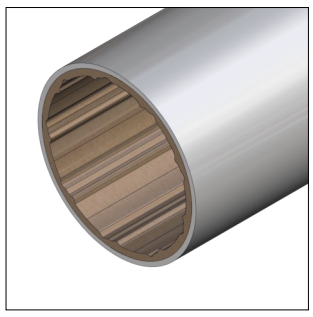

INTACT

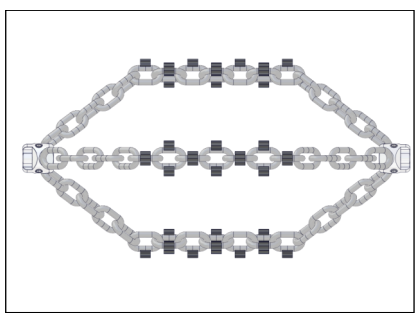

Original Chains

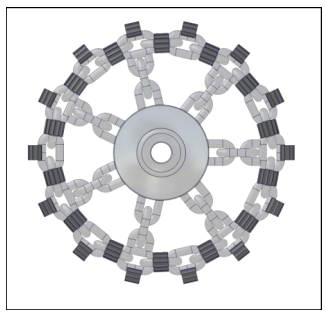

Cyclone Chains

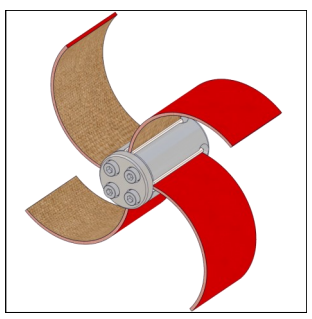

Smart Cutter

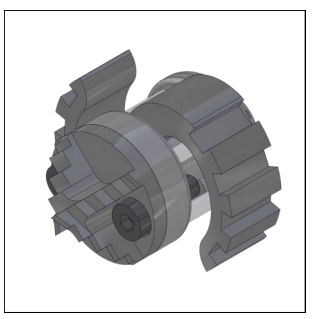

Mini Sweeper

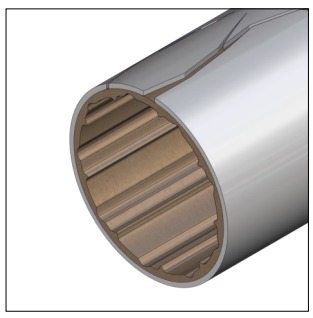

FRAGILE

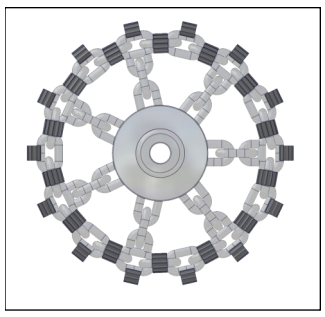

Cyclone Chains

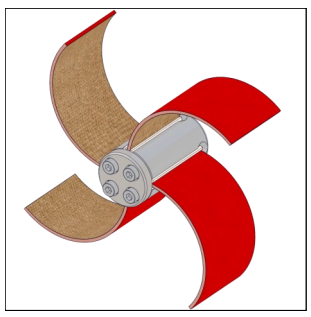

Smart Cutter

Wire Cleaning Brush

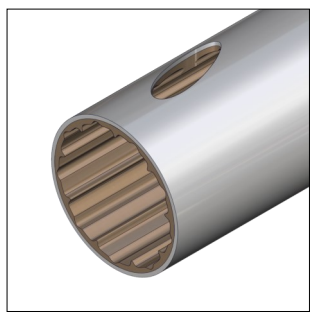

DAMAGED

Wire Cleaning Brush

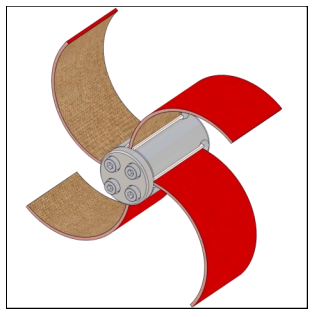

Smart Cutter

SPECIAL

ROOTS

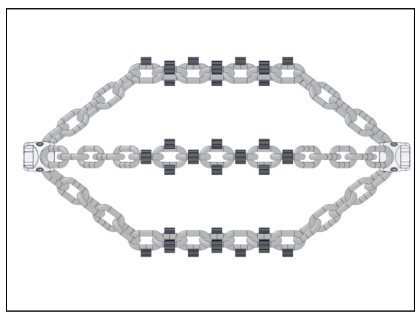

Original Chains

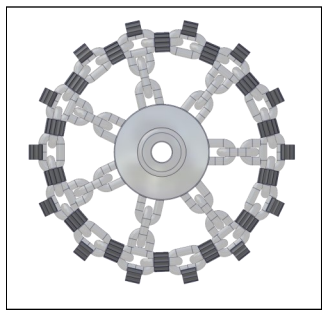

Cyclone Chains

Twister Mini

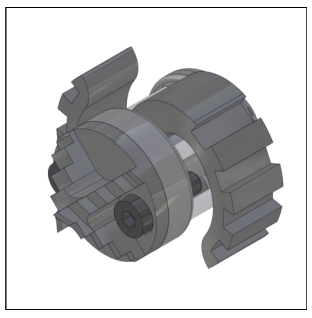

Mini Sweeper

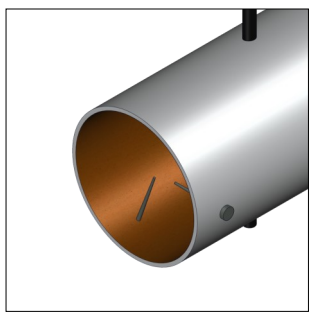

METAL

Refer to the Midi and Maxi Miller Range of Machines

Micro Miller

Shaft Diameter: **8 mm (1/3”)**

Range: **12 m (39 ft)**

Pipe Diameter Range: **DN50 (2”) to DN100 (4”)**

Mini Miller

Shaft Diameter: **8 mm (1/3”)**

Range: **17 metres (55 ft)**

Pipe Diameter Range: **DN50 (2”) to DN100 (4”)**

Available Tools	**Size Diameter**
Original Chain (Standard)	DN50 (2”) to DN150 (6”)
Original Premium Chain	DN50 (2”) to DN150 (6”)
Cyclone Chain (Standard)	DN70 (3”) to DN150 (6”)
Cyclone Premium Chain	DN70 (3”) to DN150 (6”)
Smart Cutter	DN50 (2”) to DN75 (3”)
Wire Cleaning Brush*	DN50 (2”) to DN150 (6”)
Twister Mini	DN50 (2”) & DN70 (3”)
Mini Sweeper	DN50 (2”) & DN70 (3”)

* Wire brushes should only be used for cleaning fine dust or light mineral deposits.

Please refer to your user manual before undertaking any work. Ask your reseller or contact Picote for further information. **www.picotesolutions.com**